Berkshire Mailbox Selector

Signature Streetscapes
a division of Port City Architectural Signage

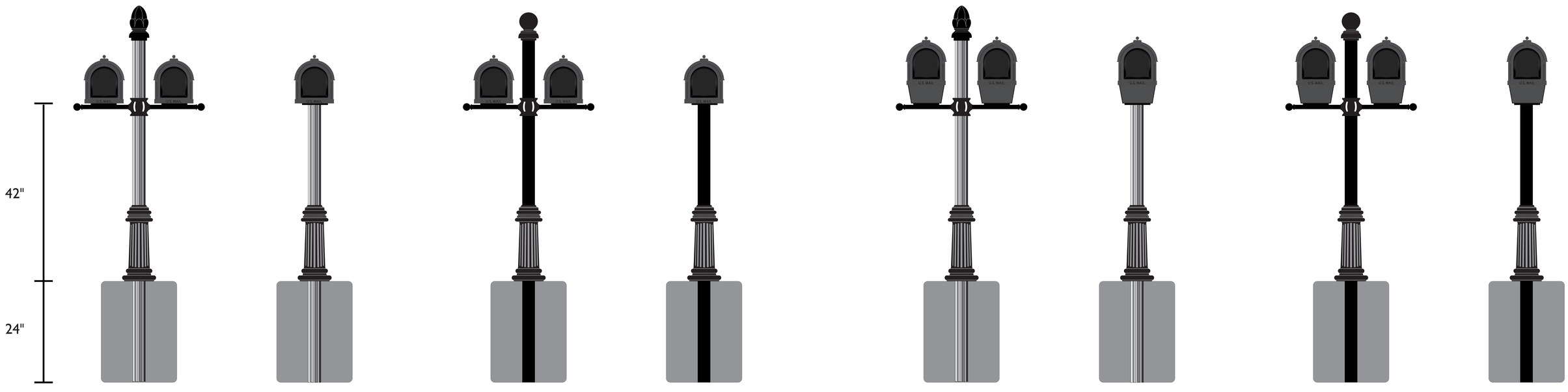

POST HT.: 84"
BURIAL: 24"

POST HT.: 66"
BURIAL: 24"

POST HT.: 84"
BURIAL: 24"

POST HT.: 66"
BURIAL: 24"

POST HT.: 84"
BURIAL: 24"

POST HT.: 66"
BURIAL: 24"

POST HT.: 84"
BURIAL: 24"

POST HT.: 66"
BURIAL: 24"

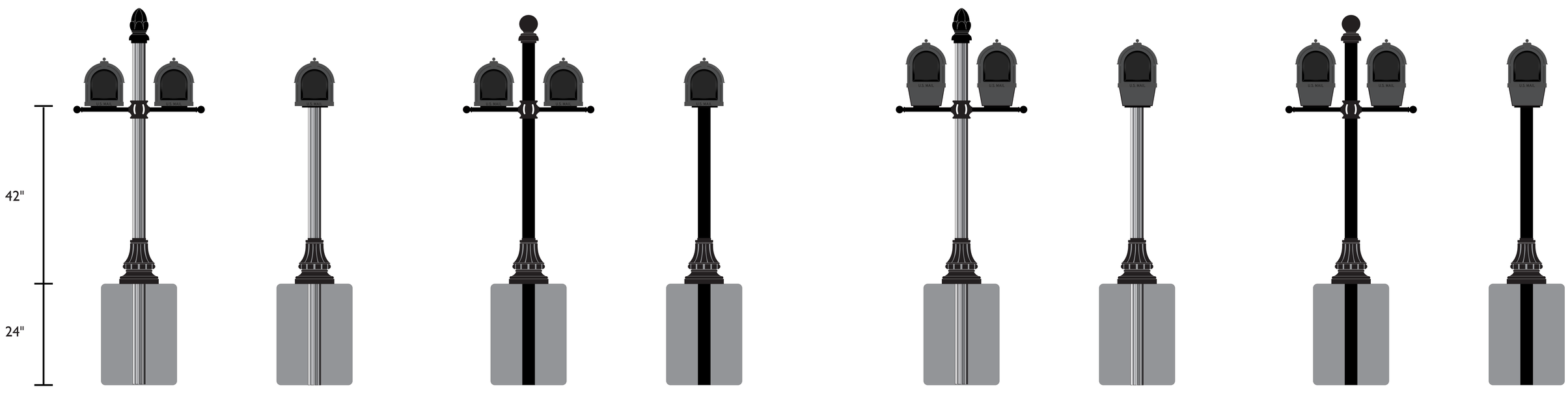

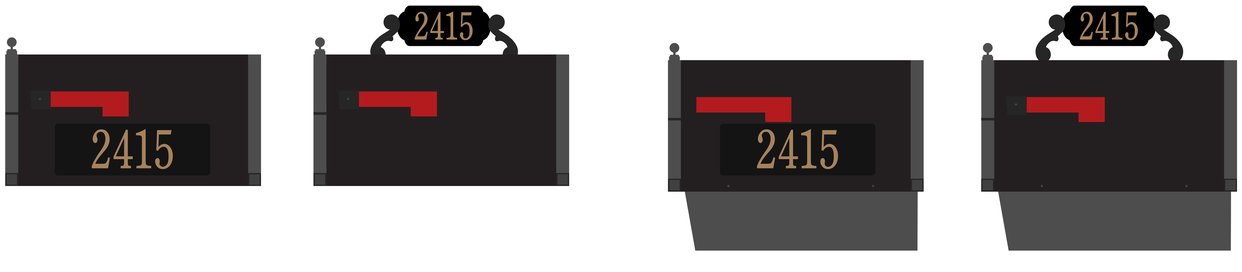

Berkshire Mailbox

101 - Berkshire Mailbox, without Paperbox

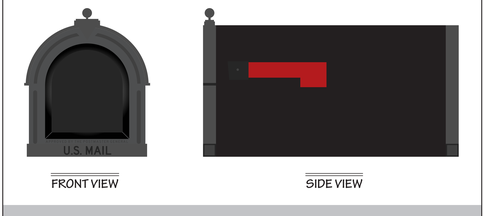

SPECIFICATIONS:
DIMENSIONS: HEIGHT - 10", WIDTH - 9", DEPTH, 19.75"
MAT'L: DIE-CAST ALUMINUM, STAINLESS STEEL SPRING HINGE AND MAGNETIC CATCH
TEXTURE: LEATHERETTE FACE-PLATE, SMOOTH SIDE WALLS
COLOR: GLOSS BLACK, RED FLAG
RUST-PROOF, DURABLE POWDER COATED FINISH
APPROVE BY THE U.S. POSTMASTER GENERAL

201 - Berkshire Mailbox, with Paperbox

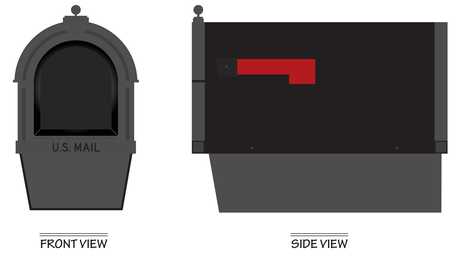

SPECIFICATIONS:
DIMENSIONS: HEIGHT - 15", WIDTH - 9", DEPTH, 19.75"
MAT'L: DIE-CAST ALUMINUM, STAINLESS STEEL SPRING HINGE AND MAGNETIC CATCH
TEXTURE: LEATHERETTE FACE-PLATE, SMOOTH SIDE WALLS
COLOR: GLOSS BLACK, RED FLAG
RUST-PROOF, DURABLE POWDER COATED FINISH
APPROVE BY THE U.S. POSTMASTER GENERAL